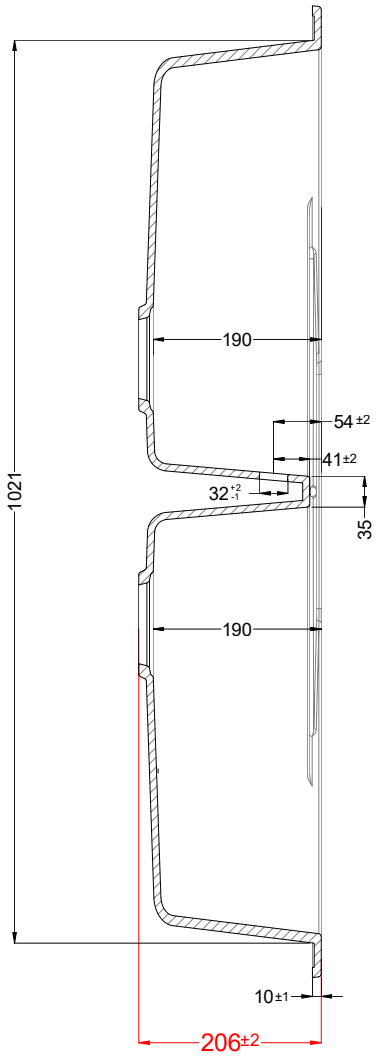

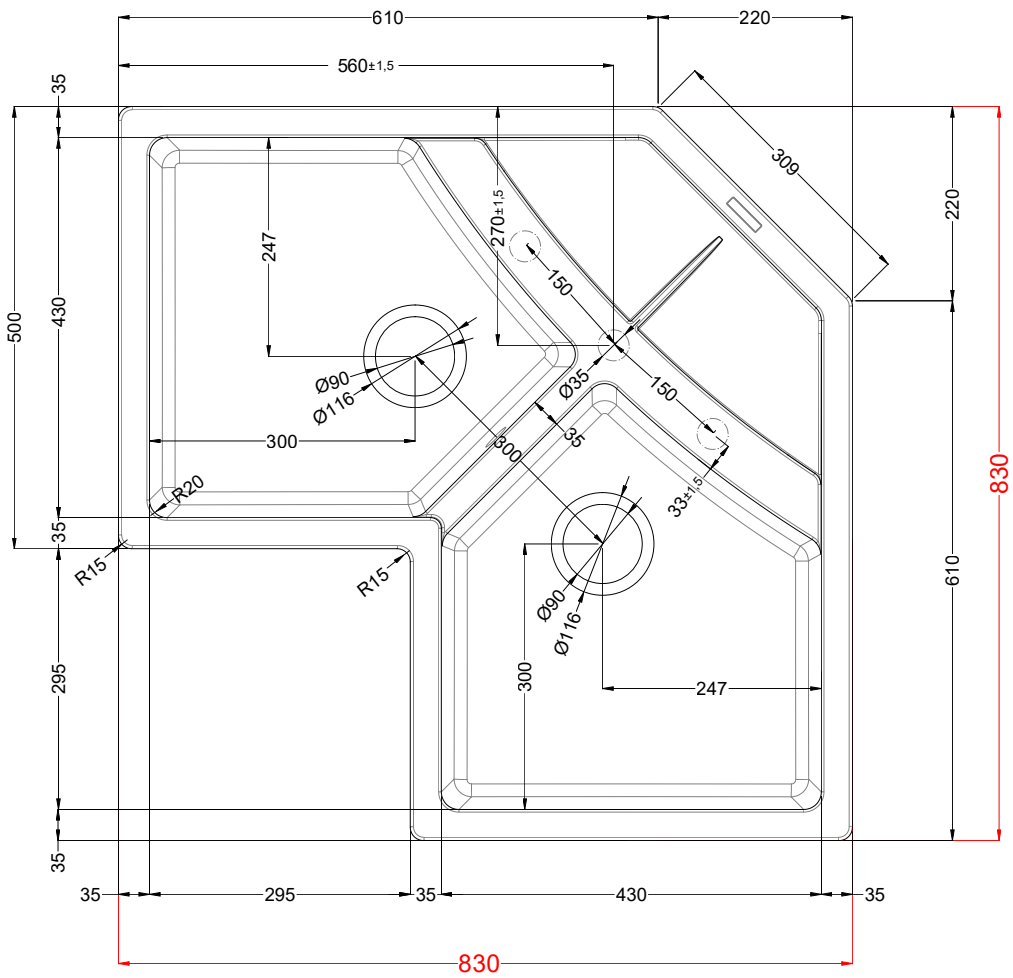

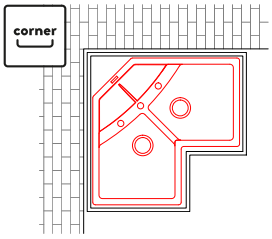

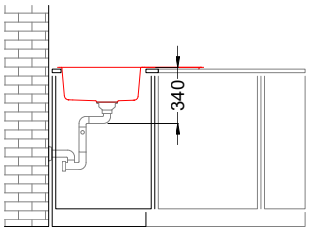

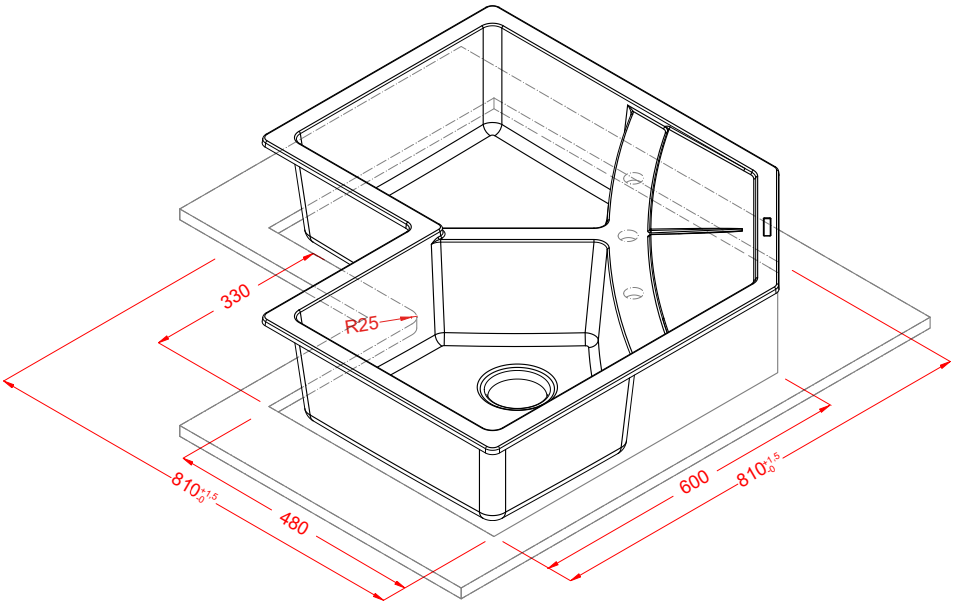

UNICO CORNER

general tolerances where not expressly communicated ±0.2%
connection dimensions according to UNI EN 695

italian origin